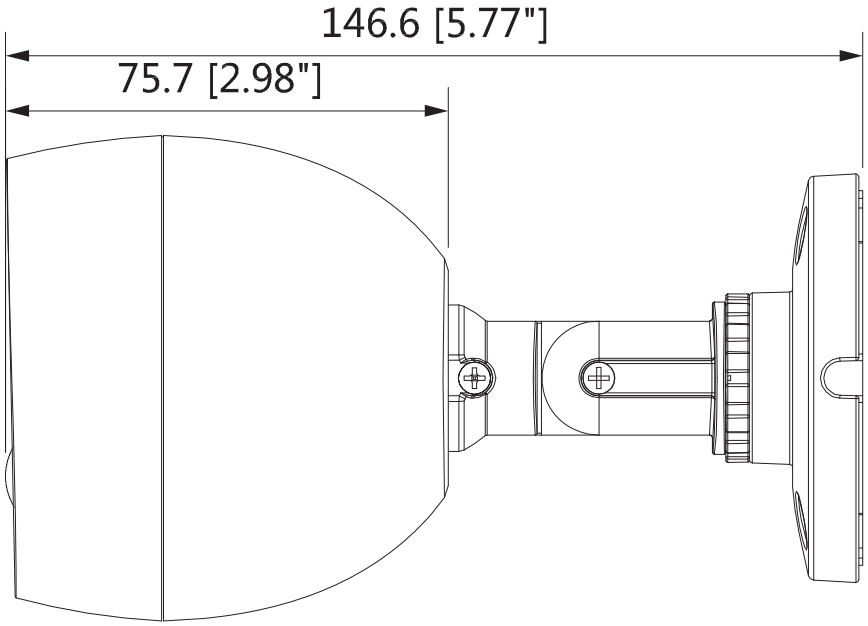
146.6 [5.77"]
75.7 [2.98"]

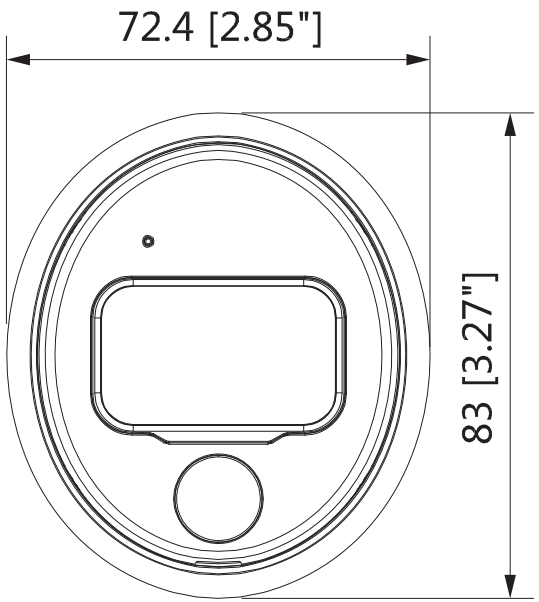
72.4 [2.85"]
83 [3.27"]

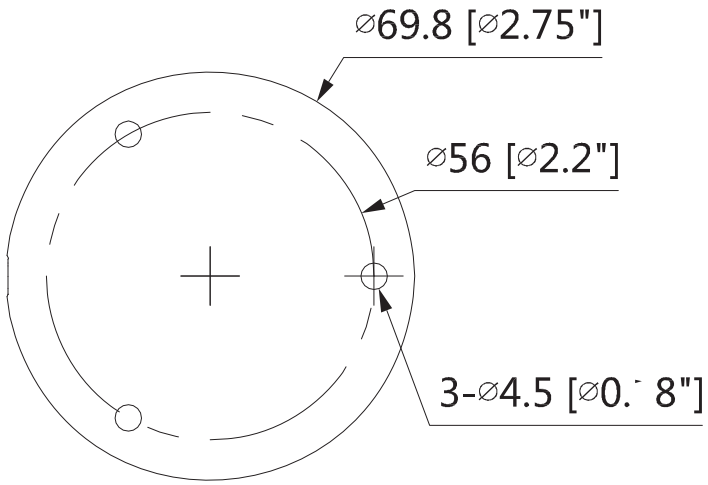
⌀69.8 [⌀2.75"]
⌀56 [⌀2.2"]
3-⌀4.5 [⌀0.18"]