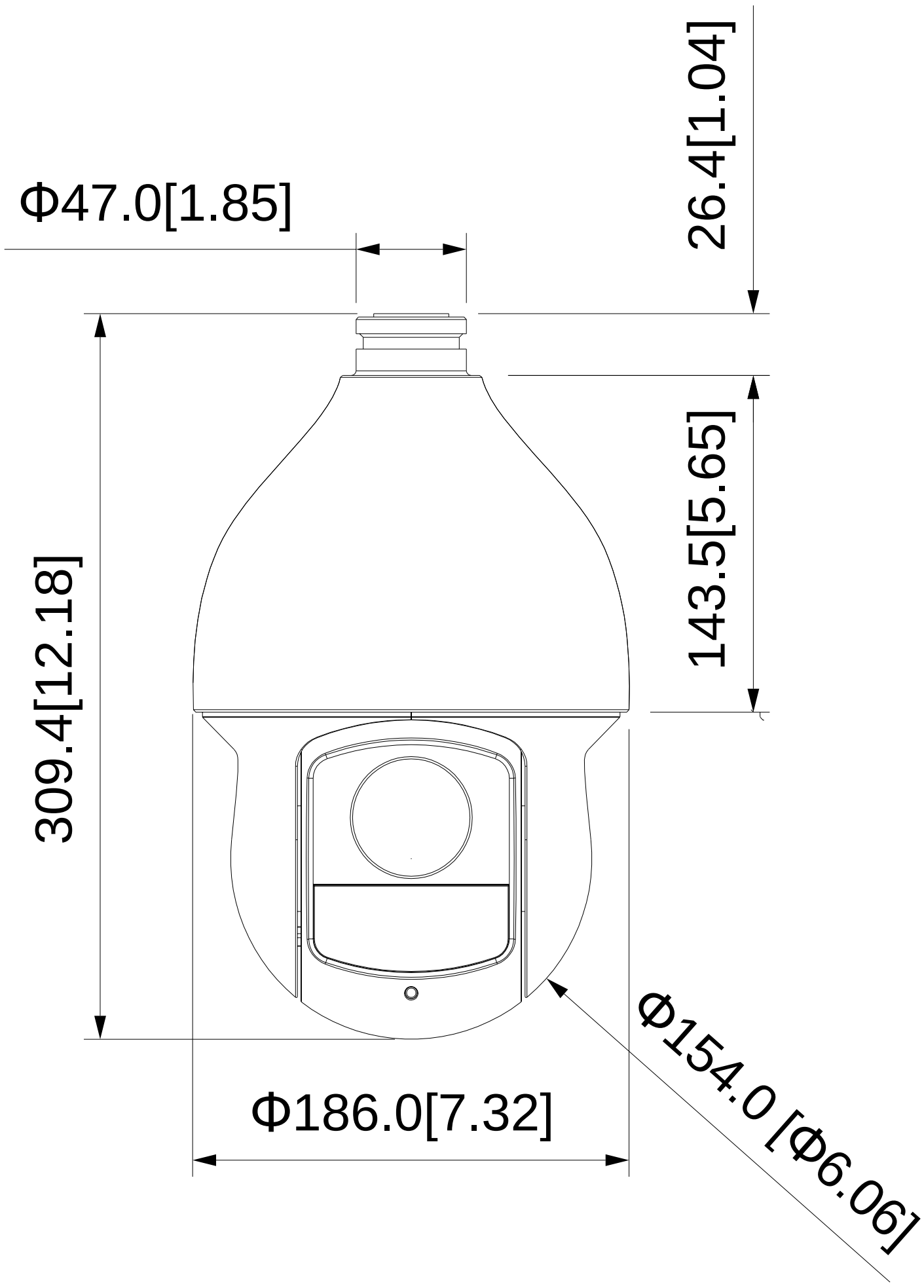
Φ47.0[1.85]
26.4[1.04]
143.5[5.65]
309.4[12.18]
Φ186.0[7.32]
Φ154.0 [Φ6.06]